GARDA SINGLE LEVER PULL OUT

TAP3254, TAP3255

HOWDENS

Info for the Installer

04-26

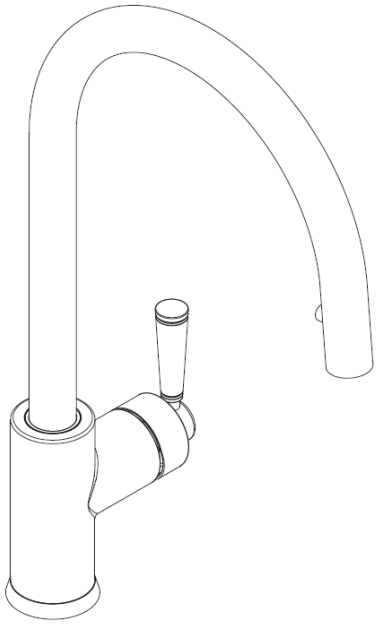

Installation Preparation:

Inspect all parts for damage and completeness before installation.

MUST flush the supply pipes before installing the tap.

Failure to flush can damage the cartridge and invalidate the warranty.

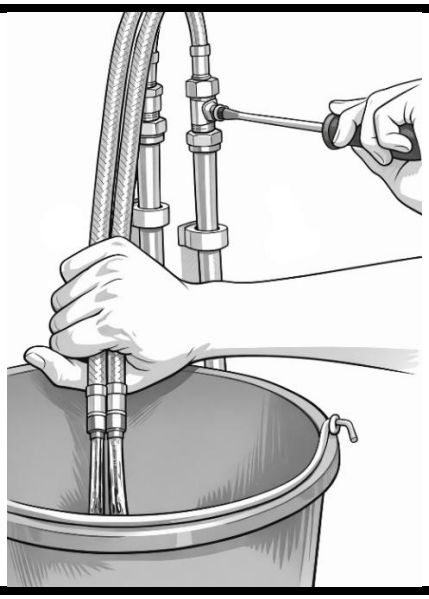

Check the available water pressure is sufficient and not excessive.

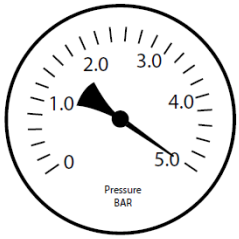

Best practice:

- Fit isolation valves and mesh filters to both hot and cold supplies in an accessible position.
  This helps prevent premature valve failure and allows easier maintenance.

- Non return (check) valves may be needed, check the technical data and parts and contents table.

- If replacing a tap, remove it and clean the pipe ends. Ensure the tap hole area is clean and free from sealant.

- Check the tap will fit the mounting depth and reach the outlet position before installation.

- Requires a Ø35 mm tap hole.

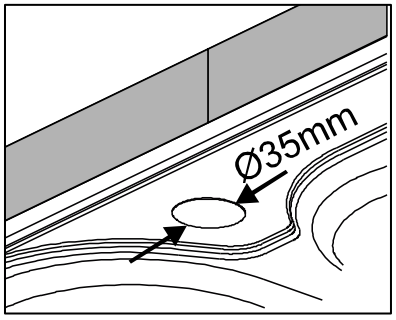

- Loosely position the tap and tails to check pipe alignment.

- Modify pipework if required before final fitting.

- Check rear movement of handles

Technical Data:

Minimum operating pressure: **1.5 bar**	Maximum hot water temperature: **70°C***
Maximum operating pressure: **5.5 bar***	Recommended hot water temperature: **46°C**
Flow characteristics: **Single flow**	

*If these temperatures or pressures are exceeded, even for short periods, damage can result. In these instances, a thermostatic mixing or pressure reducing valve should be installed.

Flexible Hose Installation – MUST Follow

Failure to follow these instructions will invalidate the warranty.

Before fitting, check the hose is correctly crimped at both ends beyond the braided section of the hoses.

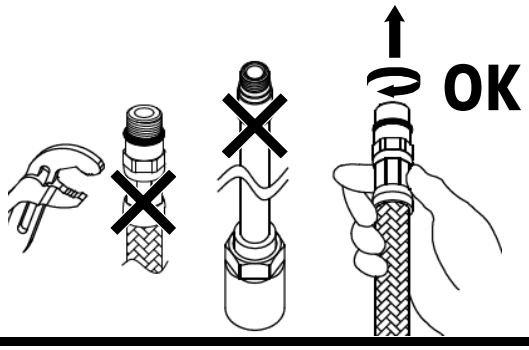

- You **MUST** only hand-tighten flexi hoses into the tap body.
- DO NOT use a spanner on the tap connection.
- Always use the pipes provided.

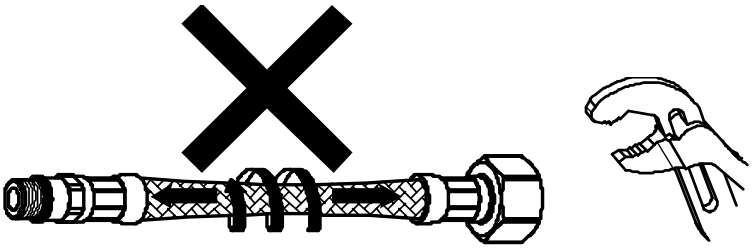

- Never twist or stretch the flexible hose during installation.
- Do not overtighten the hexagonal end of the hose when using a spanner causing the hose to twist.

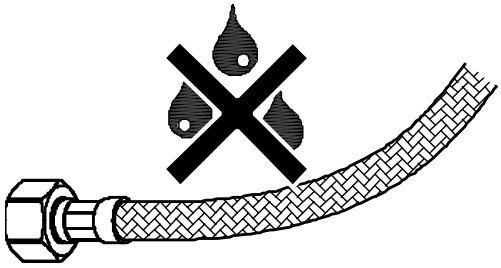

- The braiding on the flexible hose must not be in contact with any scarcely aggressive chemicals, internal or external room walls or dissimilar metals or materials.

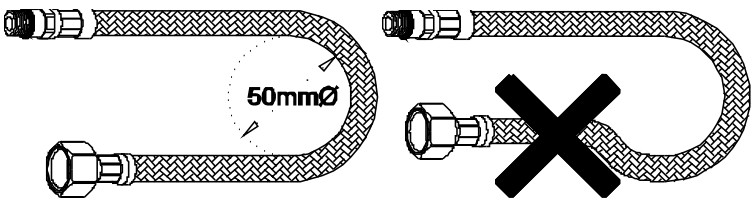

- Observe the minimum bend radius of **50mm**, hoses **MUST not be kinked or looped.**
- Hoses must not be double bent in multiple directions.

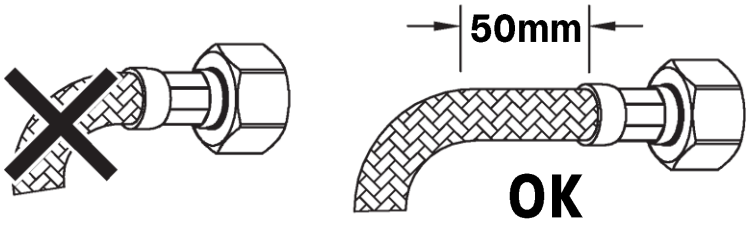

- Both ends of the hose must have a minimum **50mm** straight section before any bend.

Parts and Contents:

Key:	Description:	Qty.
A	Mixer body	1
B	Base plinth	1
C	Upper seal	1
D	fixing stud	1
E	Triangular stabilising bracket	1
F	Metal spacer	1
G	Rubber gasket	1
H	Fixing nut	1
I	Cold Flexi tail	1
J	Hot Flexi tail	1
K	Mixed water outlet tail	1
L	Fibre washer	1
M	Pull out hose	1
N	Screws	2
O	Hose weight	1

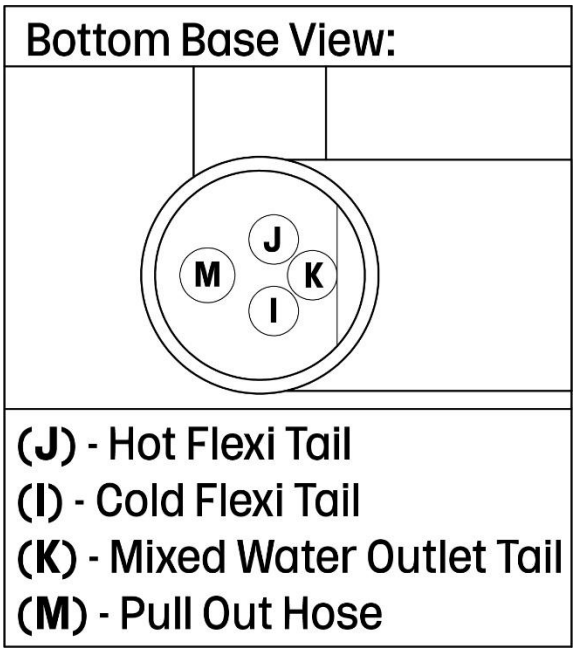

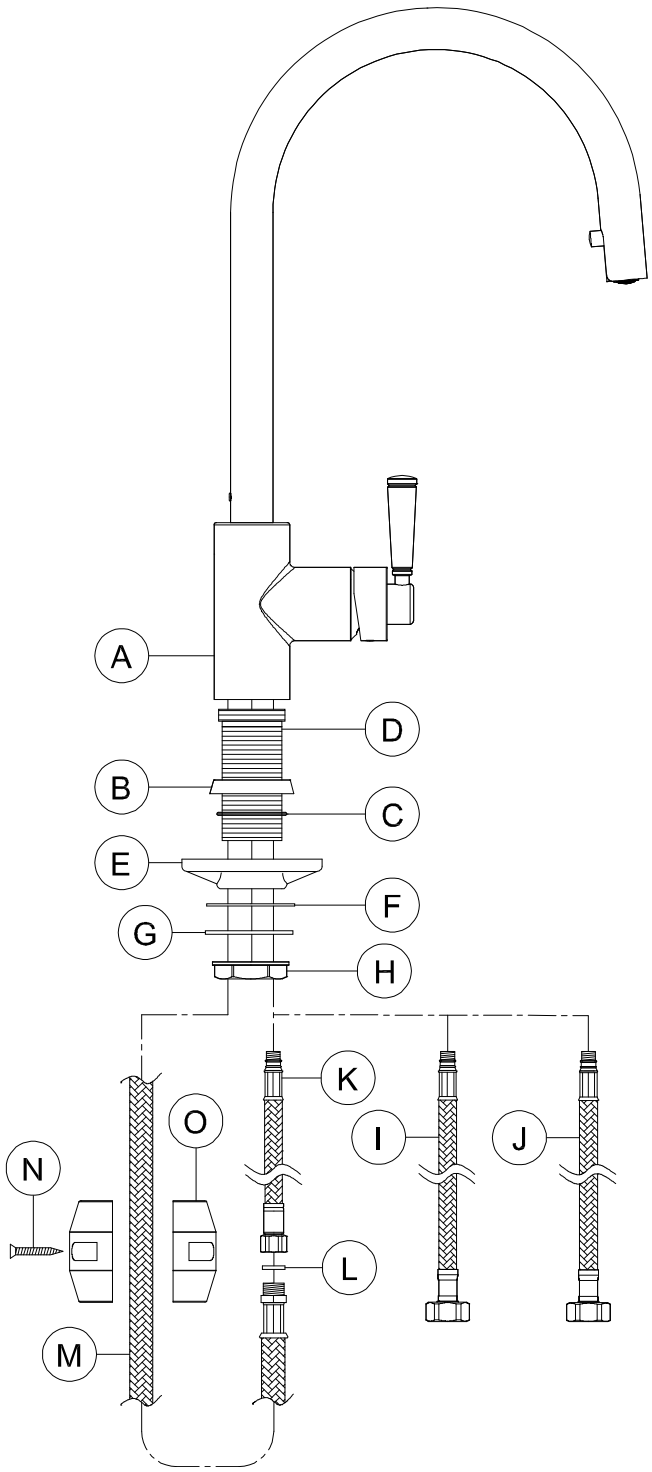

Installation:

1. Screw fixing stud (D) into base of tap body (A).

2. Pass base plinth (B) over fixing stud (D) ensuring upper seal (C) is in place.

3. Screw the hot & cold water tail pipes (I & J) into the base of the tap (A) as shown first. Then screw mixed outlet pipe (K). Please look at bottom base view drawing for correct hose location.

4. Place the mixer tap (A), Base plinth (B), upper seal (C) and fixing stud (D) onto the sink/worktop, passing the tail pipes (I, J & K) and the pull out hose (M) through the tap hole.

5. Pass the metal spacer (F) and the rubber gasket (G) over the fixing stud (D) and around the flexible tail pipes (I, J & K) and the pull out hose (M). Note: only if fitting the tap to a stainless steel sink, the white triangular stabiliser (E) can be placed where shown to help stabilize the weight of the tap.

6. Fasten fixing nut (H) securely onto the fixing stud (D) to fix the tap (A) into its correct location.

7. Place fibre washer (L) into mixed water outlet tail (K), and screw outlet tail (K) to pull out hose (M).

8. Fix the hose weight (O) with screws (M) just before the highest point of pull out hose (M) as shown.

9. Connect the hot and cold tail pipes (I & J) to the water mains using ½" BSPx15mm compression fittings.

After installation:

- Leave the new tap open and ensure all other outlets are closed.
- Turn on the mains stopcock and water heating system, then restore the hot and cold supplies, this clears any debris not previously flushed.
- Check correct operation of hot, cold and mixed flow.
- Turn the tap off, dry any wet connections and inspect all connections for leaks.
- Check after 10 minutes to confirm no slow leaks are present.
- If available, pressure test to the maximum recommended pressure.
- Clean the tap and cover it until ready for use.
- Periodically check the installation for damage.
- If the property is left unattended for longer periods, isolate the water supplies.

This product is manufactured in accordance with recognised European standards. Please ensure that your Kitchen mixer is fitted in accordance with Local Water Byelaws. Where hot and cold water mix within the mixertap, then suitable non return (check) valves should be installed to the hot and cold supplies to prevent backflow.

Hot and cold supply pressures should be as closely balanced as possible for best results. Supply pipes should maintain the maximum diameter until immediately before the fitting. The differential between the hot and cold water supply temperatures should be sufficient to allow correct mixing function.

These installation guidelines have been prepared for your direction and you must exercise due care at all times. We do not accept responsibility for problems that may occur through improper installation. Whilst assembling the tap take care not to accidentally loosen any factory fixed assemblies.

This tap has been 100% assembly tested; therefore, you may expect a small residual amount of water to remain in the tap when delivered. Any water marks can be removed using the above care advice.

GARDA SINGLE LEVER PULL OUT

TAP3254, TAP3255

HOWDENS

Info for the customer

Care Instructions for your tap:

Clean regularly using a soft damp cloth only.
If required, use warm water with mild liquid detergent, then rinse and dry thoroughly.

Using any other cleaning method will invalidate the warranty.

DO NOT use:

- Abrasive or scouring cleaners
- Acidic cleaners
- Solvents (including acetone or chlorinated products)
- Harsh household chemicals (e.g. oven, drain or toilet cleaners, metal polishes)



If fitted, remove and clean the spout end aerator periodically to maintain flow performance.

Guarantee (UK only):

Your tap has the benefit of a comprehensive manufacturer's guarantee, details of which are shown on your Proof of Purchase Document. Any claim during the period of the guarantee must be accompanied by the Proof of Purchase. The product must be correctly installed and operated in accordance with the manufacturer's instructions and used for normal domestic purposes. This guarantee does not cover accidental damage, misuse or alterations which are likely to affect the product. The guarantee is invalid if the product is tampered with or repaired by any unauthorised person. The guarantee in no way affects your statutory or legal rights.